P41A Absolute Specification
Rev 1.0

6/30/09

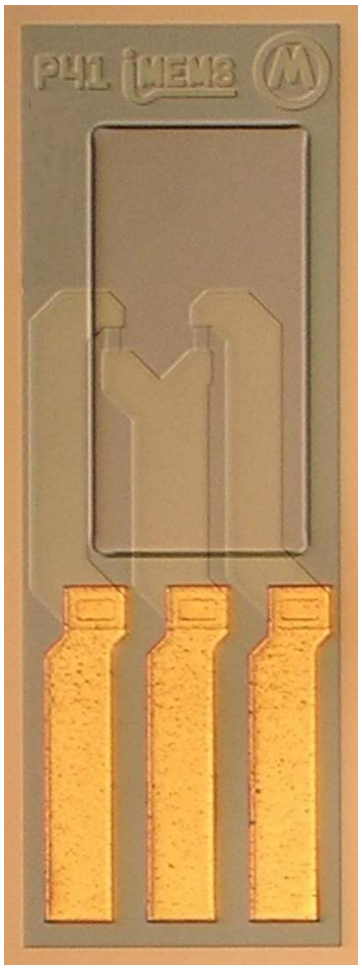

Physical Configuration:

Fully Active Half Bridge
Pb/Sn Solderable Metallization

Absolute Maximum Ratings:

Parameter	Minimum	Maximum	Units
Operating Pressure	0	1060	mmHgA
Over Pressure[1]		4000	mmHgA
Burst Pressure	5000		mmHgA
Built-in Reference Pressure[2]		$10x10^{-3}$	mmHgA
Excitation[3]	2	10	Volts
Operating Temperature	15	40	°C
Storage Temperature	-25	70	°C
Physical Dimensions			
Length	645	655	µm
Width	220	230	µm
Thickness	115	125	µm
Solderability Shelf Life	2		Yr.

[1] Built-in Overpressure Stop with touchdown occurring at approximately 30 PSI.
[2] This Device is an "Absolute" Pressure Sensor measuring the applied Pressure WRT a Sealed Vacuum Reference.
[3] AC or DC excitation is allowed since the parasitic diode formed by the P-Type sensing elements in the N-Type substrate is not reverse biased as in most applications.

Electrical Specifications:

Parameter	Minimum	Typical	Maximum	Units
Gauge Resistance (25ºC)	600	800	1000	Ω
Resistor Matching[4] (25ºC)	-40	±10	40	Ω
Full Scale[5] ΔR[6]	4.6 ± 20%	6.1 ± 20%	7.6 ± 20%	Ω
Full Scale Span[2, 7]	12.5	17.5	22.5	mV
Offset Voltage[8]	-20	±5	20	mV
Sensitivity[9]	10	12.5	15	μV/V/mmHg
Pressure Nonlinearity[10]	0	±0.1	0.25	%FSS
TCOffset[11]	-20	±5	20	μV/ºC
TCSpan	-1000	-700	-400	ppm / ºC
TCSNL[12]	-1.0	±0.25	1.0	%FSS
TCR[13]	1500	2000	2500	ppm / ºC
TCRNL[14]	-1.0	±0.8	1.0	%FSS
Pressure Hysteresis[15]	-0.67	±0.1	0.67	%FSS
Offset Thermal Hysteresis[16]	-0.3	±0.1	0.3	%FSS
Noise[17]	-0.17	±0.1	0.17	%FSS

[4] Mismatch between the Center and Edge resistances in Ω at 25ºC.
[5] At Reference Conditions of 5V Excitation, 1060 mmHg Absolute Pressure, and 25ºC.
[6] The specified ΔR's are intended to correspond to the nominal gauge resistance, with larger gauge values requiring larger ΔR's in order to maintain the sensitivity of the device in the range of 10-15 μV/V/mmHg. See Graph 1 for a more detailed explanation of this Specification.
[7] Based on Completion of the half Bridge into a Full Bridge using two inactive 800 Ω Resistors. (See Fig. 4)
[8] Based on worst Case 600 Ω Fully Active Half Bridge with 800 Ω Inactive Half Bridge Completion and 5VDC Excitation.
[9] Calculated based on Bridge Completion with 800Ω fixed Resistors (See Fig. 4)
[10] Terminal Based Nonlinearity.
[11] Change in Offset voltage over temperature, due to changes in residual stresses over temperature.
[12] Terminal based nonlinearity in TCS curve over operating temperature range.
[13] Based on Linear Slope from Cold to Hot Normalized to Reference Room Temperature (25ºC).
[14] [14] Terminal based nonlinearity in TCR curve over operating temperature range.
[15] Measured as the difference (in %FSS) from the initial Offset and the Offset after pressurizing to –50 mmHg then 100 mmHg then returning back to 0 mmHg. The Pressure Hysteresis is the difference between the initial Offset and the Offset after all pressure excursions and returning to 0.
[16] Measured as the difference in initial Offset, and Final Offset after thermal cycling from 25ºC to 15ºC to 25ºC to 40 ºC and finally returning to 25ºC. The Offset Thermal Hysteresis is the difference in Offset (in %FSS) between the initial and final 25ºC Offsets.
[17] V_{p-p} , Measured in controlled Noise environment with no pressure applied.

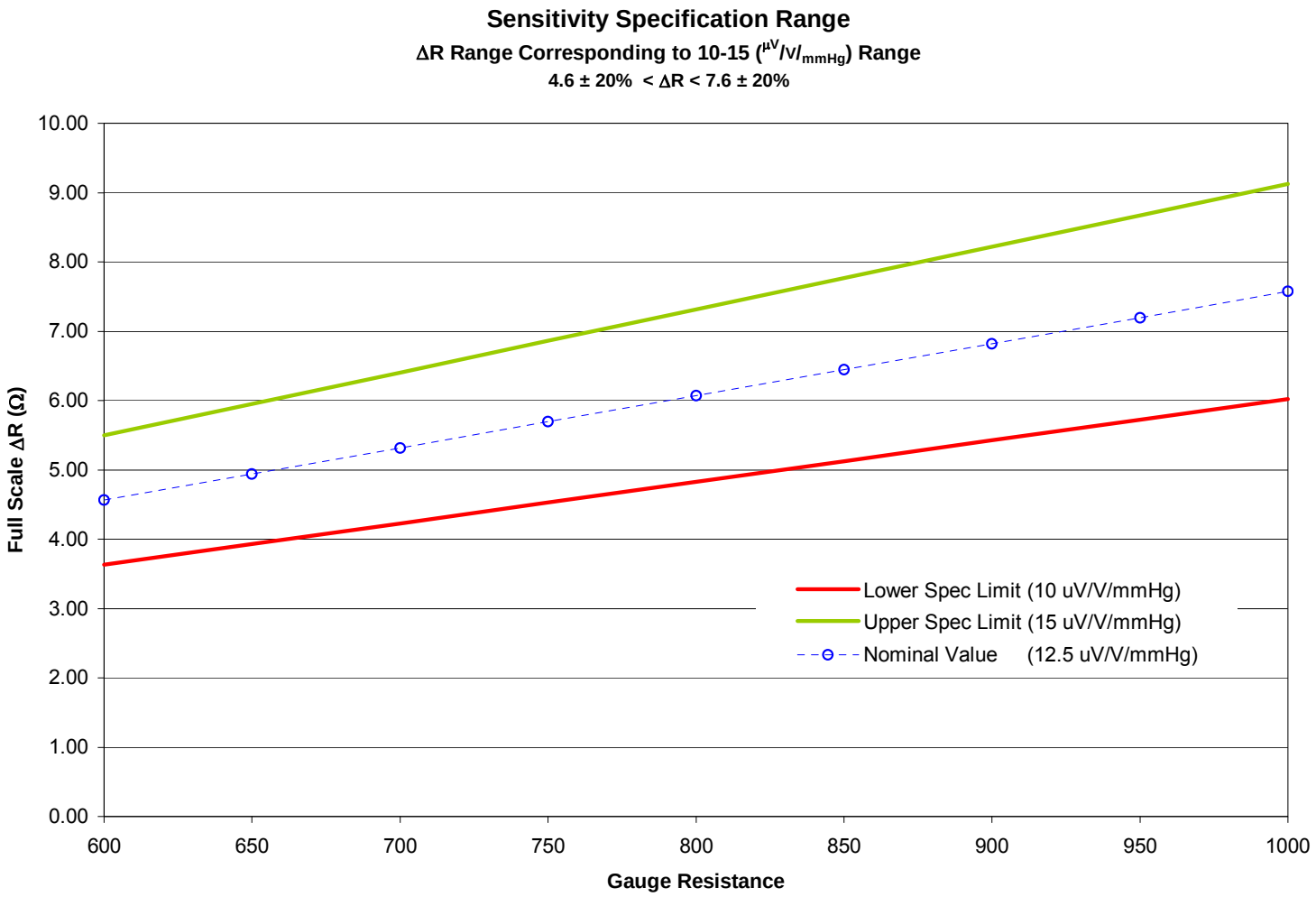

Relationship between Full Scale ΔR, and Sensitivity

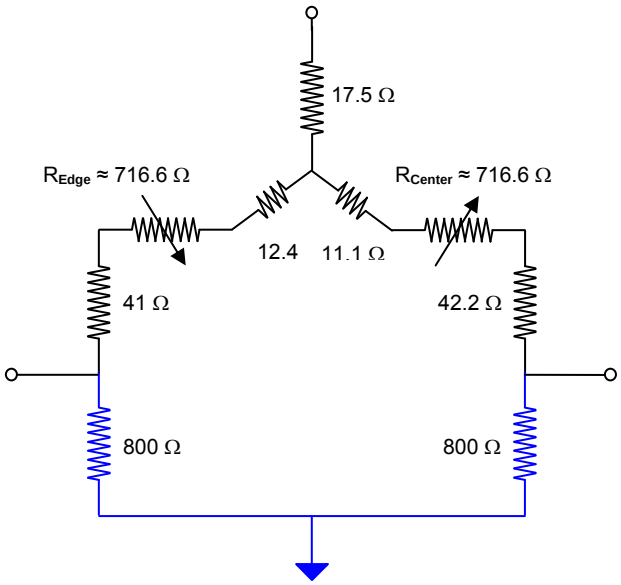

Half Bridge (with Parasitic Resistances), and 800 Ω Completion Resistors
(Typical Values indicated)

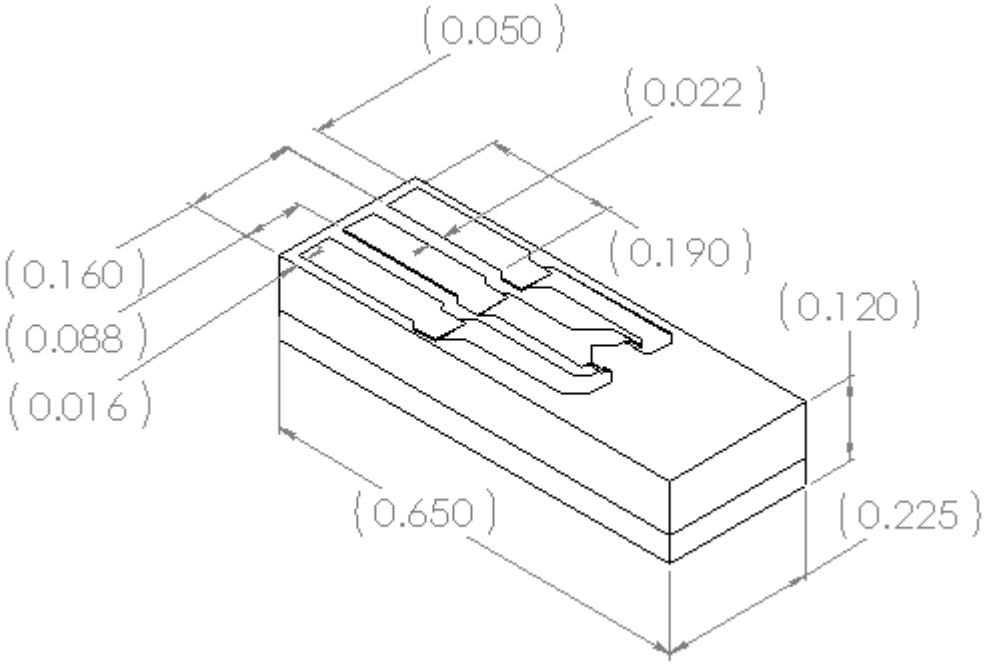

Isometric View with Pad Locations